Experiment No. 10

Aim :- Verification and interpretation of truth tables for AND, OR, NOT, NAND, NOR,

Apparatus :- Experiment done through v-lab.

1] AND gate

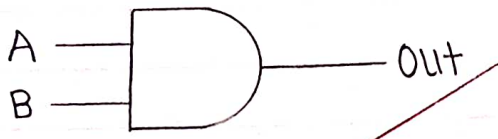

$Y = A \cdot B$

Fig. ① Logic symbol of AND gate

Input		Output
A	B	$Y = A \cdot B$
0	0	0
0	1	0
1	0	0
1	1	1

Fig. ② Truth table of AND gate

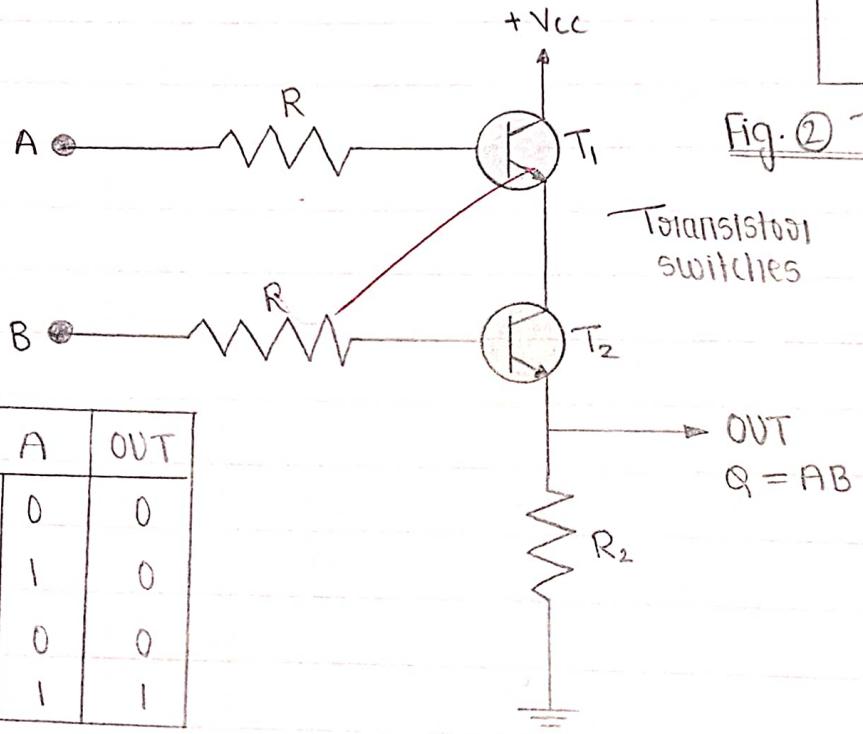

B	A	OUT
0	0	0
0	1	0
1	0	0
1	1	1

Fig. ③ AND gate through RTL logic

Experiment No. 10

Aim :→ Verification and interpretation of truth table for AND, OR, NOT, NAND, NOR.

Apparatus :→ Experiment done through v-lab.

Theory :→

Logic gates are the basic buildings blocks of any digital system. Logic gates are electronic circuits having one or more than one input and only one output. The relationship between the input and output is based on a certain logic. Based on this, logic gates are named as -

1] OR
2] NOT
3] NAND
4] AND
5] NOR

1] AND gate

The AND gate is an electronic circuit that gives a high output (1) only if all its inputs are high. A dot (.) is used to show the AND operation i.e. A.B or can be written as AB. A simple 2-input logic AND gate can be constructed using RTL [Resistor - Transistor - Logic] switches connected together as shown in below with the inputs connected directly to the transistor bases. Both transistors must be saturated "ON" for an output at Q.

Teacher's Signature

2] OR gate

$$Y = A + B$$

Fig. ④ Logic symbol of OR gate

Input		Output
A	B	Y = A+B
0	0	0
0	1	1
1	0	1
1	1	1

Fig. ⑤ Truth table of OR gate

Diode OR gate

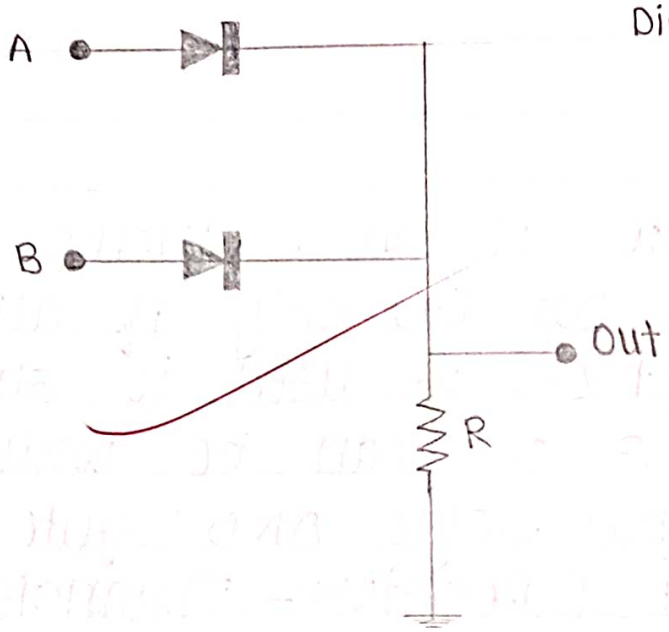

Fig. ⑥ OR gate through DRL logic

2] OR gate

The OR gate is an electronic circuit that gives a high output (1) if one or more of its inputs are high. A plus (+) is used to show the OR operation.

OR gate can be realized by DRL [Diode-Resistance - Logic] or by TTL [Transistor - Transistor - Logic]. Presently, we will learn how to implement the OR gate using DRL. To realise OR gate, we will use a diode at every por input of the OR gate. The anode part of diode is connected with input while the cathod part is joined together and a resistor, connected with the cathod is grounded. In this case, we have taken two inputs which can be seen in the circuit below.

When both the inputs are at logic 0 or low state then diodes D_1 and D_2 become reverse biased. Since the anode terminal of diode is at lower voltage level than the cathod terminal, so diode will acts as a open circuit so there is no voltage across resistor and hence output voltage is same as ground. When either of the diodes is at logic 1 or high state then the diode corresponding to that ~~p~~ input is forward bias. Since this time anode is at high voltage than cathod therefore current will flow through forward bais diode and this current then appears on resistor causing high voltage at output terminal also. Hence at output we

3) NOT gate

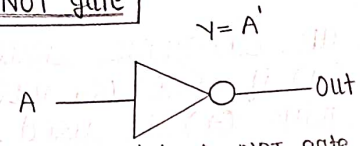

Fig. ① Logic symbol of NOT gate

Input	Output
A	Y
0	1
1	0

Fig. ② Truth table of NOT gate

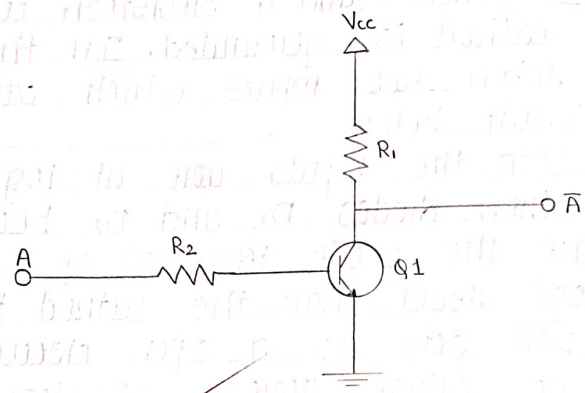

Fig. ③ NOT gate through transistor

get high or logic 1 or +5V. So, if any or both inputs are high. The output will be high or "1".

3] NOT gate

The NOT gate is an electronic circuit that produces an inverted version of the input at its output. It is also known as an inverter. If the input variable is A, the inverted output is known as NOT A. This is also shown as A' or $\bar{A}$ with a bar over the top, as shown at the outputs.

NOT gate can be realized through transistor. The input is connected through resistor R_2 to the transistor's base. When no voltage is present on the input, the transistor turns off. When the transistor is off, no current flows through the collector - emitter path. Thus, current from the supply voltage (Vcc) flows through resistor R_1 to the output. In this way, the circuits output is high when its input is low.

When voltage is present at input, the transistor turns on, allowing current to flow through the collector - emitter circuit directly to ground. This ground path creates a shortcut that bypasses the output, which causes the output to go low. In this way, the output is high when the input is low and low when the input is high.

4] NAND gate

$Y = \overline{AB}$

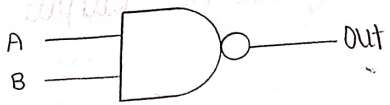

Fig. ⑩ Logic symbol of NAND gate

Input A	Input B	Output Y
0	0	1
0	1	1
1	0	1
1	1	0

Fig. ⑪ Truth table of NAND gate

B	A	OUT
0	0	1
0	1	1
1	0	1
1	1	0

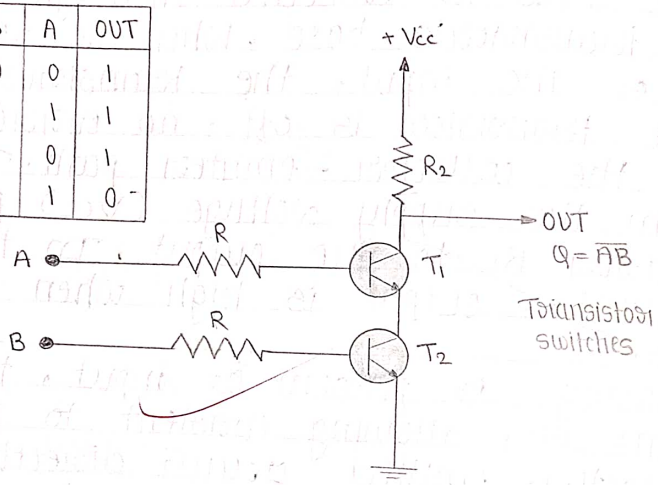

Fig. ⑫ NAND gate through RTL logic.

4] NAND gate

This is a NOT-AND gate which is equal to an AND gate followed by a NOT gate. The outputs of all NAND gates are high if any of the inputs are low. The symbol is an AND gate with a small circle on the output. The small circle represents inversion.

A simple 2-input logic NAND gate can be constructed using RTL switches connected together as shown below with the inputs connected directly to the transistor bases. Either transistor must be cut-off or "OFF" for an output at Q.

5] NOR gate

This is a NOT-OR gate which is equal to an OR gate followed by a NOT gate. The outputs of all NOR gates are low if any of the inputs are high. The symbol is an OR gate with a small circle on the output. The small circle represents inversion.

A simple 2-input logic NOR gate can be constructed using RTL switches connected together as shown below with the inputs connected directly to the transistor bases. Both transistors must be cut-off or "OFF" for an output at Q.

5] NOR gate

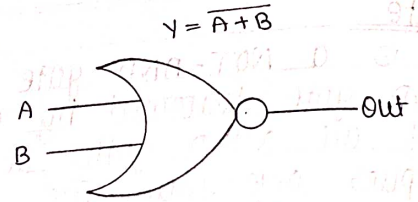

Fig. 13 Logic symbol of NOR gate

A	B	F
0	0	1
0	1	0
1	0	0
1	1	0

Fig. 14 Truth table for NOR gate

B	A	OUT
0	0	1
0	1	0
1	0	0
1	1	0

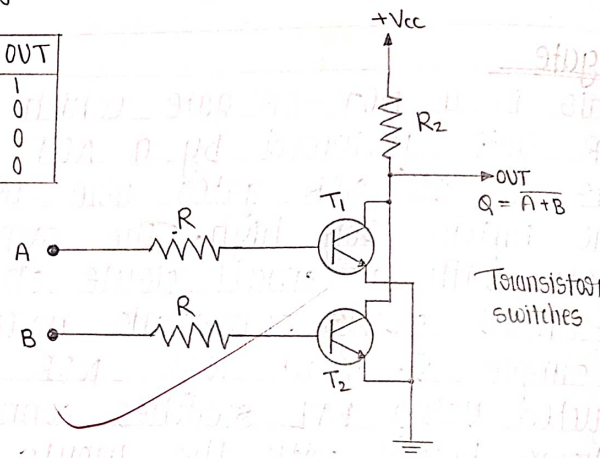

Fig. 15 NOR get thorough RTL logic

A
16/6/23

Result :→ Truth table for AND, OR, NOT, NAND, NOR have been verified.

Viva Questions :→

1] When logic gates are connected to form a gating / logic network it is called as a _____ logic circuit.
- ✓ (a) Combinational
- (b) Sequential
- (c) Systematic
- (d) Hardwired

2] The NOR gate is OR gate followed by _____
- (a) AND gate
- (b) NAND gate
- ✓ (c) NOT gate
- (d) None of the above

3] The NAND gate is AND gate followed by _____
- ✓ (a) NOT gate
- (b) OR gate
- (c) AND gate
- (d) None of the above.

4] In boolean algebra, the bar sign (–) indicates _____
- (a) OR operation
- (b) AND operation
- ✓ (c) NOT operation
- (d) None of the above

Teacher's Signature _____